Louisiana Archaeological Society
# NEWSLETTER

RICHARD A. WEINSTEIN, Newsletter Editor
COASTAL ENVIRONMENTS, INC., BATON ROUGE, LOUISIANA 70802

Volume 14, Number 2 Summer–Fall 1987

## FROM THE EDITOR

This Newsletter features two new additions which I believe will make it a bit more interesting in regard to content, and a bit less confusing in regard to membership. First, as I had suggested in the previous Newsletter (Vol. 14., No. 1), several members sent in letters to the editor. Two of these appear in this issue. I strongly encourage Newsletter readers to continue this trend.

Second, with the generous aid of Nancy Hawkins and other staff members at the Division of Archaeology, Department of Culture, Recreation and Tourism, the address labels used on this issue, and all forthcoming Newsletters, are the result of a computerized list and print out. As you will readily see, not only is your name and address on the label, but also your membership status and the year through which your dues have been paid. Thus, no longer should there be a need to constantly remind people to pay their dues, nor should there be any confusion on membership status.

Along the same lines, I would like to mention that anyone who still has not paid their dues for 1987 will no longer receive any Newsletters and will not receive the 1987 Bulletin when it becomes available. The L.A.S. has been gracious enough to continue sending Newsletters to those of you who have not paid, but that policy will now cease. So, please take a few seconds to look at your address label to see if you have paid for 1987. If you have not, send your money in now! Similarly, it is almost time to send in dues for 1988. Why not take the time to pay for 1988, as well? Remember, it is not only the Newsletter that you will be missing, but the Bulletin and any special publications for the year you did not pay.

Lastly, I would like to note what many of you probably know already, that is, the passing of two long-time L.A.S. members--Mitchell Hillman and F. Manning Durham. There are separate tributes to each in this Newsletter, and Jon Gibson is preparing a full obituary on Mitchell for the next Newsletter. The Society surely will miss both their dedication to, and knowledge of, archaeology in Louisiana.

## NEW L.A.S. TREASURER

Although Linda Church has been L.A.S. Treasurer since the annual meeting in January, people are still sending their dues and publication requests to Brian Duhe, past Treasurer. Please note, therefore, that all correspondence concerning dues, membership, publications, etc., should be directed to Linda. If such is not done, then it will take longer to process your request, and you will not be placed on the membership list as quickly as you might expect, or you may not receive the publication you ordered in a timely manner.

The *NEWSLETTER OF THE LOUISIANA ARCHAEOLOGICAL SOCIETY* is published three times a year for the Society by Coastal Environments, Inc., Baton Rouge. Send all notes, news and other communications to: Richard A. Weinstein, Editor, Coastal Environments, Inc., 1260 Main Street, Baton Rouge, Louisiana 70802. Unless otherwise indicated, opinions stated herein are those of the Editor and do not necessarily reflect Society policy.

Linda's address is printed on the membership renewal form attached to this Newsletter. Please use it !

## LETTERS TO THE EDITOR

Dear Editor,

Thanks a million for creating "Letters to the Editor." Now I can write without having to worry about using the metric system of measurement; the only thing I know about the metric system is that one kilo is equal to 2.2 pounds of marijuana. I feel completely free now to speak in terms of miles, feet, and, inches--you know, good old USA terminology. I am now even brave enough to ask: Why does archaeology use the metric system (does it have something to do with international language)? However, knowing that the professional jargon is important, I would like to point out (from my experience) that if I am making inquiries about sites among grass-roots people, I never ask, "Have you ever found any *projectile points*?" I ask, "Have you ever found any *Indian arrow heads* around here?"

I also would like to share with the readers exactly what I do for archaeology. Basically, I drive around the highways and byways. I even stop at trash piles; it is a good place to stop to talk to the old ones. On one such stop, I met an individual, and as we got around to talking about what I was doing, the gentleman said he knew of a battle site between the Attakapas and the Jayhawkers not far from the landfill. So, after convincing the gentleman that, "No, I do not have a gun, and I am not going to kidnap you," we proceeded to the site.

I now have that little story recorded as oral history. I also meet a lot of country folks, young and old alike, who live close to the land. Many site locations and oral history die with the old ones, so I think it is important to seek out these individuals and get the history written down somehow, in addition to passing on the information to professional archaeologists. I know that there are individuals, such as the ones I have mentioned in this letter, in every parish. So whatever parish I work in, I try to meet these people and gather the information relevant to archaeology.

Thanks again for setting up this column! I hope others will write to the editor.

Sylvia Link
Acadia Parish

*Thank you for the kind remarks. Do any of our readers know why archaeologists use the metric system? If so, perhaps they would be kind enough to share it with us. -- The Editor*

Dear Editor,

In 1986, as president of the L.A.S., I had a number of goals, among which were to help insure a successful annual meeting and to provide a meaningful and enjoyable field school for the Society's members. I believed then, as now, that these events should take place with no cost to the L.A.S. treasury. As it turned out, neither cost our treasury a cent.

To help offset our expenses, I pushed for a raffle. The Executive Committee approved the raffle, set the price at one dollar a ticket, and turned it over to me, headaches and all, with a pat on the back and best wishes. There being no precedent for a raffle, I went about the task in the dark. I had 5,000 tickets printed up and mailed ten to each member and 100 to each chapter. I had no idea of what the field school would cost, but I dedicated the first $2,000 of the raffle money to the field school, with the remainder (which could have been $3,000) to the L.A.S. general fund.

As an inducement to members to sell the entire 5,000 tickets, I notified everyone in a letter mailed with the tickets, that each person who sold 300 or more tickets would be given a life membership. That membership would be paid for out of the $300 sold by that member. The membership was asked to call or write to me for more tickets. Only one person did. I had visions of having to print more tickets; I hustled and sold 350 tickets. One other person was responsible for 300. That accounts for two of the three life memberships that were questioned at the January Executive Committee meeting, the minutes of which appeared in the Spring Newsletter (Vol. 14, No.1).

The reason there was no money from the raffle for the L.A.S. treasury is simply that not enough tickets were sold. Most of our members sold none; many were returned.

In an effort to have a field school comparable to those we had years ago, I asked many of you for suggestions. Everyone who responded to this request agreed that it was important to have the field school, but the consensus was, "it's your party, give it your best shot."

Jack Moore and the Northlake Chapter agreed to host the school. They handled registration, entertainment, an evening meal, drinks, certain equipment, first aid supplies, etc.

I got a work horse to direct the field school, Dr. Dave Davis. He wrote the proposal which was accepted by the Division of Archaeology and State Parks. He spent a number of weekends before and after the field school working on the Fontainebleau project, and he accepted the full responsibility for overseeing the fieldwork and writing a report on that work.

All of you who were there contributed to the success of the project. We were fortunate to have the services of a large group of professionals during the four days of the field school, and we appreciated it. But the fact remains, that only Dr. Davis spent a year on it. Because of his deep commitment, I offered him an honorarium, but he rejected it. Still, I thought we should give him a token of our appreciation, so I had a life membership paid for him out of the raffle money, not out of the L.A.S. treasury. This, then, was the third life membership in question.

While we are at it, let's look at something else that happened. The second prize in the raffle was won by John Polk. He asked that we keep the $100 prize as payment for a life membership in his name. It was done. That's four life memberships that came out of the raffle. Paid to the L.A.S. treasury.

I hope the readers now all understand, and are satisfied with the how and why of the life memberships.

As all of the readers know, a couple of people on the Executive Committee are of the opinion that the Committee should have been allowed to decide on these life memberships. If the money for these memberships had come out of the L.A.S. treasury, I would have called on them for a vote. However, please remember, the field school and the raffle were financed separately and apart from the general funds of the L.A.S. When the work and headaches of the raffle and field school were turned over to me, as well as the responsibility of funding them apart from the the L.A.S. treasury, it became necessary for me to literally make hundreds of decisions that did not involve the L.A.S. Executive Committee. The life memberships were just one of these.

Thank you for allowing me to address this situation. With love to all of you, I am

Joseph O. Manuel, Jr.
Covington, Louisiana

## F. MANNING DURHAM
**December 17, 1901 - April 17, 1987**

F. Manning Durham, a widely known amateur archaeologist and one of the organizers of the Northeast Louisiana Archaeology Society, died April 17, 1987, in his home town of Monroe.

He was born in Waco, Texas, and lived in several towns throughout north Louisiana during his early years, before moving to Monroe in 1931.

His collection of artifacts was the basis of an article in a recent volume of *Louisiana Archaeology*, which dealt with the prehistory of the Ouachita River valley. Mr. Durham began digging Indian sites at the age of 13, and continued until several years before his death. At one time his museum housed the largest collection of pottery excavated in northeast Louisiana.

Mr. Durham was a retired high school teacher and owner of the Apex Janitor Supply Company.

Survivors include his wife, Jewel B. Durham; a son, Jerry W. Durham of West Monroe; a daughter, Emma Jean Greer of Monroe; and five grandchildren and five great grandchildren.

Respectfully submitted,
Reca Jones
L.A.S. Vice-President

## MITCHELL HILLMAN
**January 31, 1943 - August 20, 1987**

Mitchell Hillman was born, raised, and died in northeast Louisiana, all under the shadow of the great mound at Poverty Point. Along the way, he made his mark on American

archaeology.

Mitchell did archaeology in several regions of the U.S., but his two most significant contributions were to the archaeology of the place he loved most, Poverty Point, and to the brotherhood and sisterhood of the profession to which he dedicated his life.

From the moment he came home to Poverty Point, he revitalized Poverty Point archaeology. Mitchell saw things others had missed or ignored. He came to know the place like no other individual. He was Poverty Point's modern-day ambassador. He drew the site to the attention of American archaeology, and to the American public in general. At his urging, many universities and scholars came to investigate the great site, and contribute scholarly papers on the subject. Mitchell, in fact, produced a number of writings on Poverty Point, and his latest will soon be published by L.S.U.

Poverty Point has its legends, and Mitchell Hillman is now one of them.

Respectfully submitted,
Jon L. Gibson
University of Southwestern Louisiana

## THE 1987 FIELD SCHOOL
**Reported by**
**Richard A. Weinstein**
**Coastal Environments, Inc.**

The 1987 L.A.S. Field School was held from Thursday, October 15, through Sunday, October 18, at Fontainebleau State Park in St. Tammany Parish. As most of you will recall, last year's field school also took place at Fontainebleau State Park and consisted of a survey of the northeastern portion of the park, coupled with mapping of the de Marigny sugar plantation and testing at the Tchefuncte site (16 ST 1). It was during the survey portion of last year's school that four small Mississippi period shell middens were located and briefly tested. This year's field school was designed to completely excavate one of these middens and to test the area around the midden in an attempt to locate possible features, such as house patterns and burials.

Unlike last year, those who participated were blessed with amazingly fine weather. I cannot recall a single cloud in the sky the whole time we were at the site. Like last year, the school was enthusiastically supported by members of the Northlake Chapter, particularly Warren Latshaw, Jack Moore, and George Riser, all of whom made the stay at the group camp more enjoyable by providing coffee and donuts in the mornings and beer and soft drinks in the afternoons and evenings. Janet Carrigee, L.A.S. Secretary and Northlake Chapter member, collected pre-registration fees. Special thanks should go to Charles Pearson, past L.A.S. Newsletter Editor, who helped organize the field school in my absence, and mailed out the flyers announcing the school.

While the overall turnout was not as great as last year, the school did register close to 50 people throughout the four days of work. There was also an excellent turn out by professional archaeologists from across the state. Those leading the excavations, in addition to myself, included Bryan Guevin of the Division of Archaeology, Debbie Woodiel of the Office of State Parks, Sylvia Duay and Charles Pearson of Coastal Environments, Inc., and George Shannon of R. Christopher Goodwin and Associates, Inc. Additional excavation expertise was offered by Joan Exnicios of the Division of Archaeology, and Jan Delgehausen of Coastal Environments. Jan also manned the registration desk and book sales throughout much of the four days. Dennis Jones of the L.S.U. Museum of Geoscience directed the mapping aspect of the fieldwork, giving "short courses" on setting up a plane table, and how to hold a stadia rod.

The evening activities centered around prepared presentations offered by several of the participants. On Thursday night, Charles Pearson gave a paper to a combined group of Northlake Chapter members and field school participants, on an archaeological survey of Golden Ranch Plantation in Lafourche Parish. On Friday night, Dennis Jones lectured on the various mapping techniques available and how they could best be used by archaeologists. On Saturday night Jamie Whelan, of the L.S.U. Museum of Geoscience, presented a discussion on the merits of *Rangia* shell analyses. Since the site being excavated was a *Rangia* shell midden, this was particularly appropriate.

The actual excavation occurred at the easternmost of the four shell middens, which we identified as the Cane Slough site. The midden was situated on the slope of small gully at the edge of the terrace overlooking the Cane Bayou floodplain. Overall, the excavation was extremely successful, as nine 2-by-2-meter-square units were opened, and the contents carefully removed and waterscreened through 1/4- 1/8- and 1/16-inch wire mesh. All material from the screens was saved for future analysis, including all of the shell. The shell midden itself proved to be extremely small, measuring only about two meters wide by about four meters long, and was removed in only two excavation units. The remaining seven units were placed on higher ground above the shell midden in the hopes of locating the house(s) of the people who presumably dumped the shell along the gully edge. Unfortunately, no house patterns or other features could be found, although scattered aboriginal ceramics were discovered in all units. We can only surmise that the Indians' house was farther back on the ridge, or was of such flimsy construction that it left no post holes for us to find.

Based on a preliminary assessment of the artifacts recovered during the field school, it appears that the area of the Cane Slough site had been occupied sporadically since the beginning of the Mississippi period at about A.D. 1200. Ceramics of this component included sherds of Anna Incised and Addis Plain, signifying a Plaquemine culture occupation. Interestingly, almost all, if not all, of the ceramics from the shell midden proper were shell-tempered, indicating a Mississippian culture affiliation. Thus, it may be postulated that the site area had been utilized as a small-scale camping or hunting locale throughout the Mississippi period, with the earliest, more widely scattered, remains attributable to Plaquemine peoples, while the later shell midden was the product of Mississippian peoples.

# BIOARCHAEOLOGICAL TESTING OF THE PORT HUDSON CONFEDERATE CEMETERY (16 EF 68)

By
Douglas W. Owsley
Department of Anthropology
National Museum of Natural History
Smithsonian Institution
and
Mary H. Manhein
Department of Geography and Anthropology
Louisiana State University

## Introduction

In May 1987, near the small community of Port Hudson, Louisiana, a team of physical anthropologists and archaeologists from Louisiana State University completed bioarchaeological testing of an area that has traditionally been known as a historic Confederate soldiers' cemetery. The primary research question centered around authentication of the site as the true location of the soldiers' cemetery.

Port Hudson is nationally recognized as an important military site. The siege of Port Hudson was the longest battle of the Civil War, lasting 48 days, from May 21 to July 8, 1863. More than 30,000 Union troops laid siege to this southern stronghold, which was defended by 6,500 Confederate soldiers trenched in behind a massive earthen breastwork. The strategic significance of the location focused on the Confederate canons that controlled passageway on the Mississippi River. It has been estimated that more than 4,000 Union soldiers lost their lives during, or as a result of wounds incurred during, this campaign. The number of Confederate casualties was much lower because of the protection provided by the fortifications.

The civilian cemetery for the town of Port Hudson is located on a bluff overlooking the former river channel outside the boundary of the present-day Port Hudson State Commemorative Area. Three rows of shallow depressions are located approximately 30 meters west of the town's cemetery. Each row contains 30 to 40 depressions. Historians

interested in this site have questioned the significance of these suspected graves and have attributed them to the burials of Negro slaves, or to graves of Confederate officers and soldiers who died during the siege.

In the 1960s, more than 100 monuments honoring "Unknown Confederate Soldiers" were placed in one area of the site by the Sons of the Confederate Veterans. Over the years, vandals have stolen several monuments. In addition, evidence of grave looting prompted local conservationists and historians to request help in determining whether this area actually was a Confederate cemetery.

Bioarchaeological testing of the site required nine working days (May 8-18). The site was cleared of vines and brush on May 9. Site mapping began on Saturday, May 9, and continued through the conclusion of the project. Jeff Homburg and Ann Whitmer were responsible for mapping the site. Archaeological testing began on May 11, and concluded on Saturday, May 16. The last test pits were backfilled on May 18. The fieldwork was productive and the final report will contribute significantly to our knowledge about this site. Preliminary evaluation of our results are described with regard to specific areas of the site. Four areas were mapped (A, B, C, and D), and test units were placed in areas A, B, and D.

### Areas A and B

Areas A and B represent the locations established by the monuments set in place in the 1960s. One hundred and eleven of these monuments remain intact. Each is inscribed with: "Unknown Confederate Soldier." The majority of the monuments are found in area A, with only a few markers comprising area B, a finger ridge on the northwestern perimeter of area A.

Seven test units were opened in areas A and B. Fifteen burials were found within these units. Of these, ten burials were excavated and various artifacts and limited human remains were recovered. The acidic soil of East Feliciana Parish precluded preservation of more than minimal bone fragments, although teeth were recovered in several burials. The teeth will allow some assessment of age, sex, race, and health of the individual. Along with historic artifacts, such as a watch from one burial and glass beads from two burials, the artifacts, human remains, and coffin hardware support the hypothesis that areas A and B are part of a civilian cemetery, containing both adults and children.

### Area C

Area C represents the civilian cemetery for the old town of Port Hudson. This cemetery is overgrown and has been vandalized in the past. Complete documentation of the remaining markers, their measurements, and information inscribed on the monuments, has been recorded and will be summarized in the final report.

### Area D

Following a careful survey of other possible locations, archaeological testing in a third area (D) confirmed the actual location of the military burials. Twelve burials were excavated in four units. Though preservation was the same as in area A, teeth, human bone fragments, and fragile brass and pewter military buttons were found in nine burials. The uniform buttons included both Confederate and Union issue. Although rebel soldiers often wore captured Union clothing, preliminary results suggest that both Union and Confederate soldiers were buried in this area. This interpretation seems likely in certain cases. For example, three buck shot were found in the abdominal region of Burial 19, who was buried in a uniform with Union eagle buttons. This individual was probably a Union soldier who breached the line and was shot at close range with Confederate ammunition, the "buck and ball."

### Acknowledgements

Support for this research has been provided by the Port Hudson Battlefield Preservation Committee; the College of Arts and Sciences, Louisiana State University; the LSU Museum of Geoscience; the City of Zachary; a grant from the United States Department of the Interior, as administered by the Louisiana Division of Archaeology,

Department of Culture, Recreation and Tourism; and the Smithsonian Institution.

## CHAPTER NEWS

### Imperial Calcasieu Chapter
### Reported by Harry Tanner

On February 28, 1987, the Imperial Calcasieu Chapter held a field trip on McFadden Beach, located west of Sabine Pass, Texas. Dr. Russell Long of Beaumont, Texas, went along to help. Several fine artifacts were found on the beach, a well-known locale for finding Paleo-Indian points and tools and the remains of extinct Pleistocene animals.

The March meeting consisted of a film that was made at Poverty Point by Harry Tanner, Chapter Secretary, and his wife, Lorene, along with help from the late Mitchell Hillman.

Dr. Russell Long was guest speaker for the April meeting. His slide presentation and talk was on McFadden Beach, where he has spent 30 years collecting.

The Imperial Calcasieu Chapter is located in the Lake Charles area of southwest Louisiana. Meetings are held on the last Thursday of each month at Frosch Hall, McNeese State University.

### North West Chapter
### Reported by David Jeane

The chapter held its last meeting of the spring on May 26, 1987, and was treated to a presentation by Claude McCrocklin on the Marksville culture. McCrocklin showed slides of major Marksville sites, including the Marksville site itself, and slides of diagnostic Marksville artifacts.

On June 23, the chapter met for a work shop and "show and tell". The work shop was designed to help people fill out state site forms, along with an explanation on the state site numbering system. The "show and tell" aspect of the program featured individual collections by various chapter members.

After a break for the summer, meetings resumed on September 22, with another presentation by Claude McCrocklin. This time Claude showed slides of several contact period sites in southwest Arkansas.

## RECENT PUBLICATIONS

*Harvey, A Prehistoric Village of the Marksville/Troyville Periods on the Mississippi Gulf Coast, at Biloxi.* By Dale Greenwell. 1986. SMARG, Biloxi, Mississippi.

The Harvey site (22 HR 534) is located on the Biloxi Peninsula of Mississippi, having an unusual settlement-subsistence pattern, evolving from the merging of two cultural spheres: the Woodland of the Lower Mississippi Valley and the Marine from the central Gulf coast. The Marksville-Troyville elements are dominant, but Santa Rosa-Weeden Island are strongly present. Ceramically, Harvey is an excellent example of cultural flow between the Lower Valley, Mobile Bay area, and northwest Florida. It is suggested that Harvey represents a new phase of Marksville culture.

The report is complete with geology, biota studies, ceramic analysis, house patterns, burials, etc. 144 pp., 32 photos, 27 illustrations and tables. Limited printing. Soft cover. Send $12.50 to SMARG, P.O. Box 426, Biloxi, Mississippi 39533.

*Excavations at Site 41WH19, Wharton County, Texas.* By L. W. Patterson, J.D. Hudgins, R. L. Gregg, and W. L. McClure. 1987. Report No. 4. Houston Archeological Society, Houston, Texas.

Site 41WH19 has an occupation sequence of at least 10,000 years, from the Paleo-Indian period to the early Historic Indian period. Results of these excavations indicate that a broad-based hunting and gathering lifeway started very early in southeast Texas, and continued to the Historic period.

Report price is $9.00, including postage. Available from the Houston Archeological Society, P.O. Box 6751, Houston, Texas 77265.

## THE FLORIDA ANTHROPOLOGICAL SOCIETY, INC.

The Florida Anthropological Society is a non-profit organization founded in 1948. Its primary goal is to promote the careful scientific study of the past and present peoples of Florida and adjacent regions. The Society encourages interaction between avocational and professional archaeologists and

anthropologists, and promotes high standards of ethics and quality of work among its members. A number of local chapters exist, working at the local level on preservation-oriented projects and holding monthly meetings. To disseminate information on anthropology and archaeology, the Society publishes a quarterly journal, *The Florida Anthropologist*, and a semi-annual newsletter. An annual meeting is held during the spring at which research papers are presented.

Membership in the Florida Anthropological Society is open to any person interested in archaeology, ethnology, physical anthropology, cultural anthropology, and associated topics, with a focus on Florida and surrounding areas in the southeastern US and the Caribbean. Membership is from January through December of each year. Dues received after October 1 will be applied to membership in the following calendar year. All membership categories receive one copy of all Society publications published during the calendar year.

We invite you to become a member and help us preserve and protect our historic and cultural heritage.

Types of Membership:
Regular (Individual) ----- $12.00
Family ----- $18.00
Institutional ----- $15.00
Sustaining ----- $25.00
Patron ----- $100.00
Life ----- $200.00

Foreign subscribers should add US $5.00 for postage. Checks or money orders should be made payable to The Florida Anthropological Society, and sent to: Membership Secretary, FAS, 308 6th Street, NW, Largo, Florida 33540.

## WANTED:
## Information on Louisiana Fluted Points

How many Paleo-Indian fluted points are there in Louisiana? No one seems to know.

The answer to this question can be found only by taking an accurate survey. I am trying to start a program which will scientifically record all known fluted points found in Louisiana. L.A.S. members are asked to provide data on any whole or broken fluted points in their collections. I am not requesting, nor will I require lone of, any projectile points or other artifacts. Also, if any members know of private collection containing fluted points, please encourage these owners to complete a survey form.

In order to accurately calculate data, it is very important to contact every individual or institution (collectors, diggers, pothunters, colleges, universities, museums, etc.) that may possibly have information about fluted points.

Every archaeology club president is urged to encourage their members to seek out fluted points, as well as completed survey forms. With your help, results can be compiled quickly and accurately.

I will collect all completed forms. These forms will be turned over to the State of Louisiana, Division of Archaeology, for safe keeping. This information will be available to anyone interested in doing further scientific research on Louisiana Paleo-Indians.

At the next L.A.S. annual meeting, preliminary survey results will be presented. These results should include number, distribution, and typological and lithic variations.

The survey form enclosed in this Newsletter is self-explanatory; however, if you have any questions or need additional copies of the survey, do not hesitate to call or write to me.

With the help of the L.A.S. members, this project should benefit our knowledge of Louisiana prehistory.

J. L. Spiller, Jr.
Route 11, Box 839
Lake Charles, Louisiana 70611
(318) 855-3190

# LOUISIANA FLUTED POINT SURVEY

(INCLUDE BOTH WHOLE AND BROKEN FLUTED POINTS)

1. Trace the outline of the fluted point on the back of this page. Show both faces with the outline of the flutes sketched in. Include photographs of the point, if available.

2. Maximum length _____ (cm/inches) PLEASE INDICATE

3. Maximum width _____ (cm/inches)

4. Maximum thickness _____ (cm/inches)

5. Width at base _____ (cm/inches)

6. Length of longest flute _____ (cm/inches)

7. Width of longest flute _____ (cm/inches)

8. Length of flute on the opposite face _____ (cm/inches)

9. Width of flute on the opposite face _____ (cm/inches)

10. Is the base ground? YES NO 11. Are the lateral edges ground? YES NO

12. Location point was discovered: Parish, river drainage, etc. Give as much detail as possible.

_____

_____

13. Describe type of lithic material: color, texture (grainy, smooth), etc.

_____

_____

14. Was the point found on surface? YES NO

15. Associated artifacts or features found with the point.

_____

_____

16. Who found the point? Date point was found.

_____

17. Name and address of current owner.

_____

_____

ADDITIONAL INFORMATION WOULD BE VERY MUCH APPRECIATED.

Please mail your completed form to:

J.L. SPILLER, JR.
ROUTE 11, BOX 839
LAKE CHARLES, LOUISIANA 70611
(318) 855-3190

# EXAMPLE

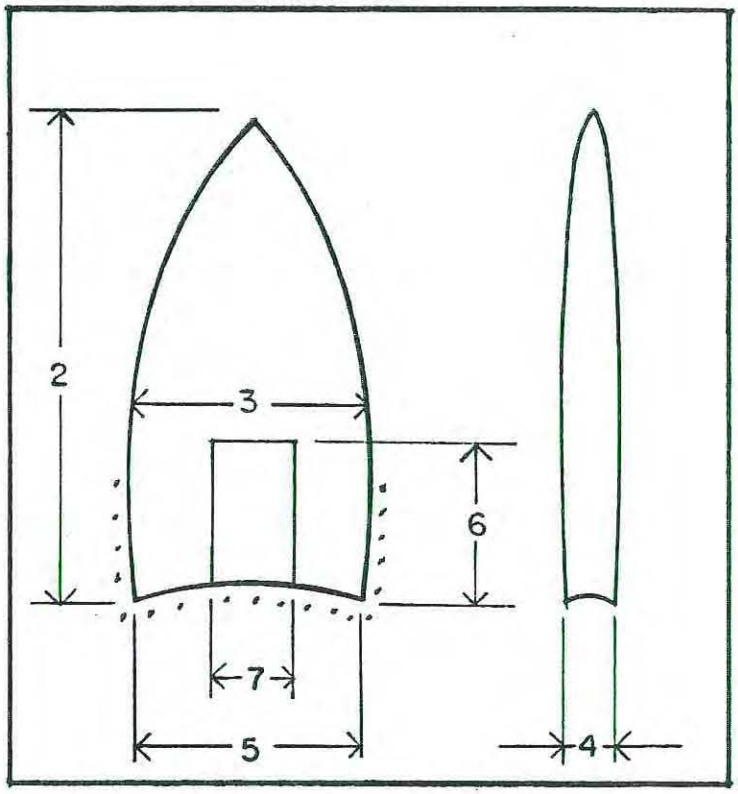


Sketch showing points of measurement for fluted points.

The numbers correspond to those on the LOUISIANA FLUTED POINT SURVEY form.

* Please note: Indicate ground areas with dotted lines.

## MEMBERSHIP APPLICATION AND DUES RENEWAL

| | | |
|---|---|---|
| Regular Membership | ( ) | Annually $15.00 |
| Associate Membership | ( ) | Annually $2.00 |
| Life Membership | ( ) | $100.00 |
| Sustaining Membership | ( ) | $300.00 |
| Student Membership | ( ) | Annually $5.00 |
| Libraries & Institutions | ( ) | Annually $15.00 |

**PLEASE PRINT OR TYPE**

Name _____

Organization _____

Address _____

City _____ State _____ Zip_____

Name of Associate Members _____

_____

_____

Back Issues of LAS Bulletins $10.00

| | | | | | |
|---|---|---|---|---|---|
| #1 | ( ) | 1974 | #6 | ( ) | 1979 |
| #2 | ( ) | 1975 | #7 | ( ) | 1980 |
| #3 | ( ) | 1976 | #8 | ( ) | 1981 |
| #4 | ( ) | 1977 | #9 | ( ) | 1982 |
| #5 | ( ) | 1978 | #10 | ( ) | 1983 |

Back Issues of L.A.S. Special Publications

| | | |
|---|---|---|
| SP#1 | Stone Points and Tools of Northwestern Louisiana | ( ) $1.00 |
| SP#2 | L.A.S. 10th Anniversary Issue | ( ) $7.00 |

Send payment to:

Linda Church
LOUISIANA ARCHAEOLOGICAL SOCIETY
P.O. BOX 50879
New Orleans, LA 70150

**LOUISIANA ARCHAEOLOGICAL SOCIETY**
1260 MAIN STREET
BATON ROUGE, LOUISIANA 70802

**ADDRESS CORRECTION REQUESTED**

Nonprofit Organization
U.S. Postage
PAID
Baton Rouge, LA
Permit 1118

***LOUISIANA ARCHAEOLOGICAL SOCIETY NEWSLETTER***